ALDERCOTE

V125
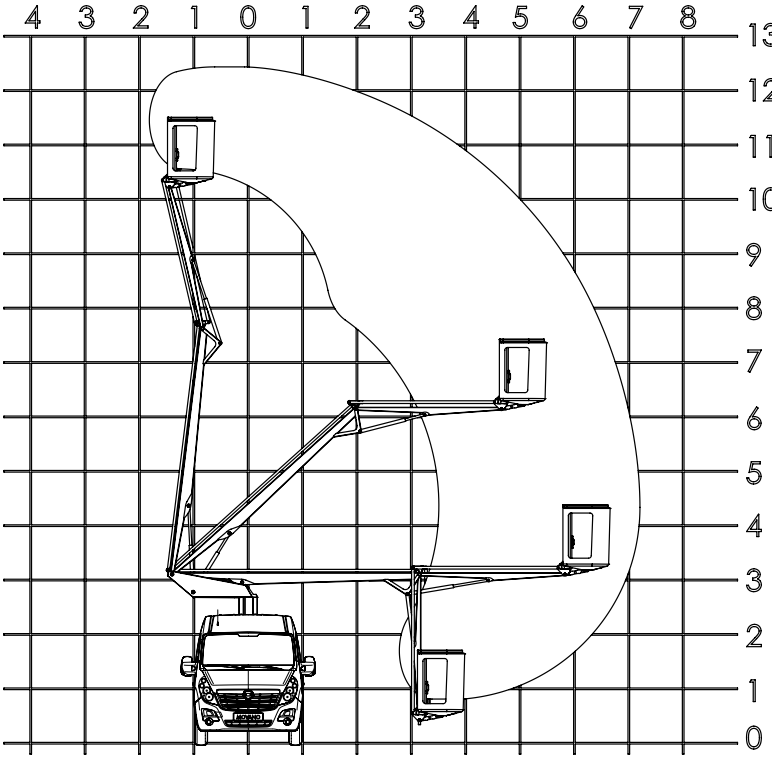
MOUNTED ON A
RENAULT MASTER
4.5T L3 H2.